ChenYang
Technologies GmbH & Co. KG

CYSJ362A GaAs Hall Effect Element

CYSJ362A series Hall-effect element is a ion-implanted magnetic field sensor made of mono-crystal gallium arsenide (GaAs) semiconductor material group III-V using ion-implanted technology. It can convert a magnetic flux density signal linearly into voltage output.

FEATURES

- High Linearity
- Superior Temperature Stability
- Miniature Package
- Replacements of **THS119**, **KSY14** and **KSY44** etc.

TYPICAL APPLICATION

- Magnetic Field Measurement
- DC Brushless Motor
- Current Sensor
- Non-contact Switch
- Position Control
- Detection of Revolution

BLOCK DIAGRAM

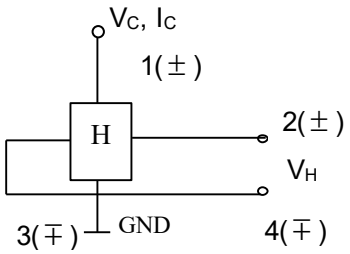

ABSOLUTE MAXIMUM RATING

Parameter	Symbol	Value	Unit
Max. Input Voltage	V_C	12V	V
Max. Input Power	P_D	150	mW
Operating temperature range	T_A	-40~125	°C
Storage temperature range	T_S	-55~150	°C
MTBF (Mean Time Between Failures)		>100k	hour

ELECTRICAL CHARACTERISTICS（T_A=25°C）

Parameter	Symbol	Test conditions	Value	Unit
Hall output voltage	V_H	B=100mT, V_C=6V	156~204	mV
Offset voltage	Vos(Vu)	V_C=6V, B=0	±8	mV
Input resistance	R_{in}	B=0mT, I_C=0.1mA	1000~1500	Ω
Output resistance	R_{out}	B=0mT, I_C=0.1mA	1800~3000	Ω
Temperature coefficient of Hall output voltage	αV_H	I_C=1mA , B=100mT (Ta=25°C ~ 125°C)	-0.06	%/°C
Temperature coefficient of input resistance	αR_{in}	I_C=0.1mA , B=0mT (Ta=25°C ~ 125°C)	0.3	%/°C
Linearity	ΔK_H	I_C=1mA B=0.1/0.5T	2	%

Notes: $V_H=V_{HM}-V_{OS}(V_u)$ (V_{HM}: measured voltage)

$$\alpha V_H = \frac{1}{V_H(T_1)} x \frac{V_H(T_2)-V_H(T_1)}{T_2-T_1} x100,$$

$$\alpha R_{in} = \frac{1}{R_{in}(T_1)} x \frac{R_{in}(T_2)-R_{in}(T_1)}{T_2-T_1} x100$$

$$\Delta K_H = \frac{K(B_1)-K(B_2)}{[K(B_1)+K(B_2)]} x200$$

$$K_H = \frac{V_H}{I_C B}$$

T_1=25°C, T_2=125°C, B_1=0.5T, B_2=0.1T

Markt Schwabener Str. 8
D-85464 Finsing
Germany

Tel.: +49 (0)8121 – 2574100
Fax: +49 (0)8121– 2574101
Email: info@cy-sensors.com
http://www.cy-sensors.com

Package Outline Drawing (Unit: mm)

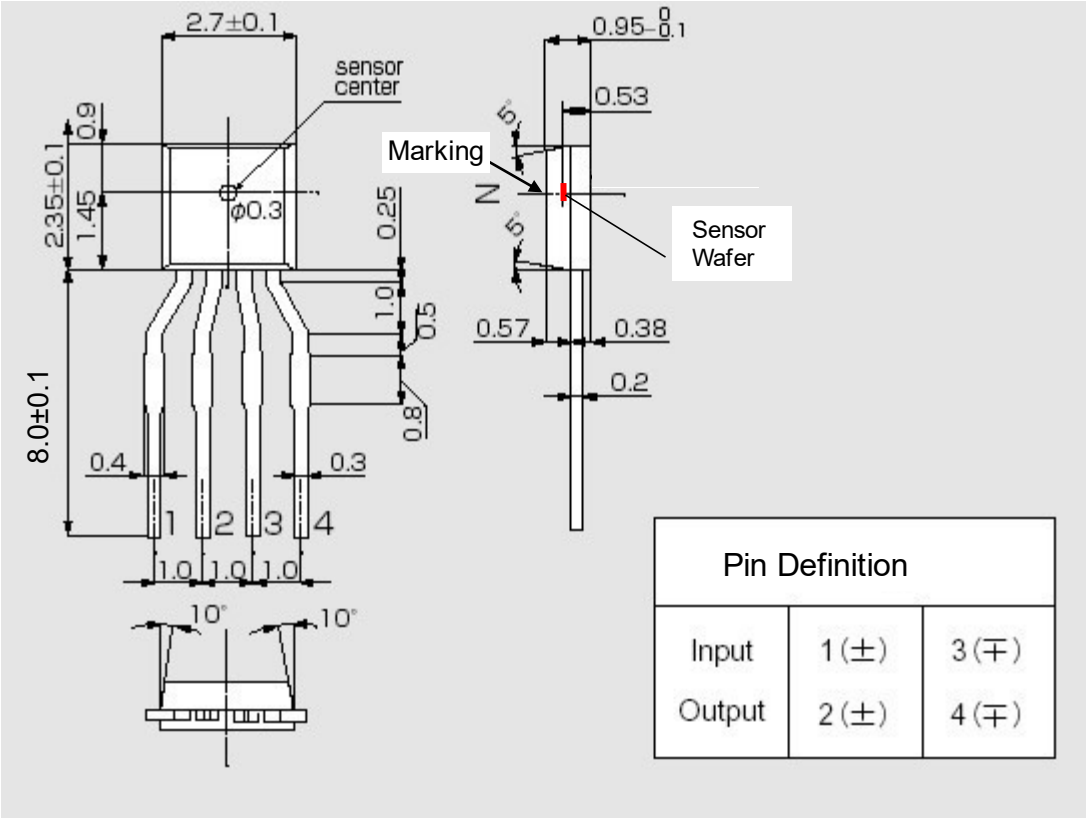

Pin Definition		
Input	1 (±)	3 (∓)
Output	2 (±)	4 (∓)

Characteristic Curves

Allowable Package Power Dissipation

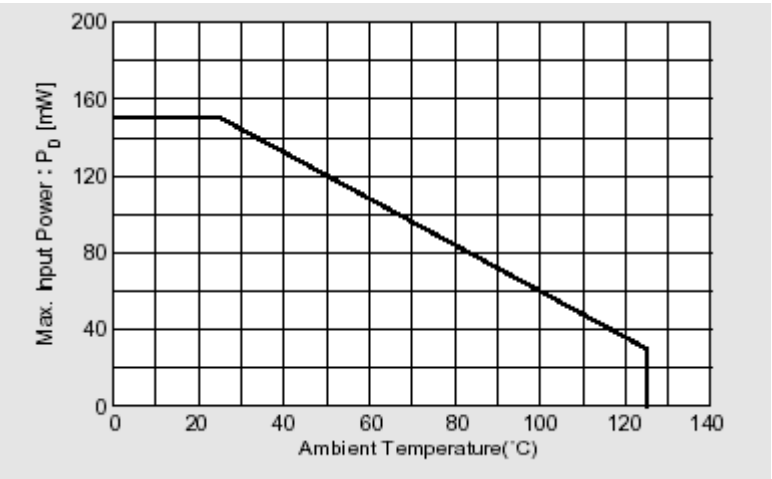

Markt Schwabener Str. 8
D-85464 Finsing
Germany

Tel.: +49 (0)8121 – 2574100
Fax: +49 (0)8121– 2574101
Email: info@cy-sensors.com
http://www.cy-sensors.com

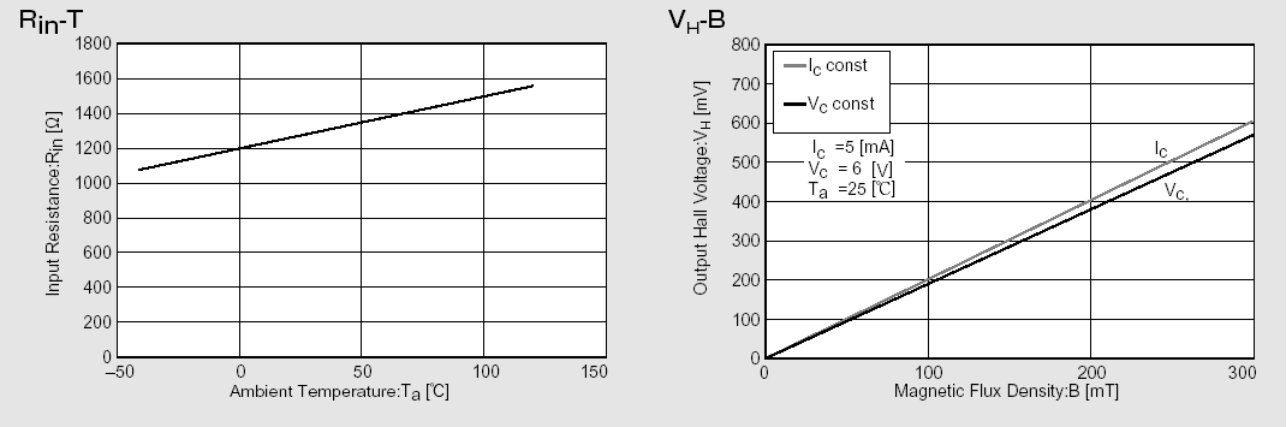

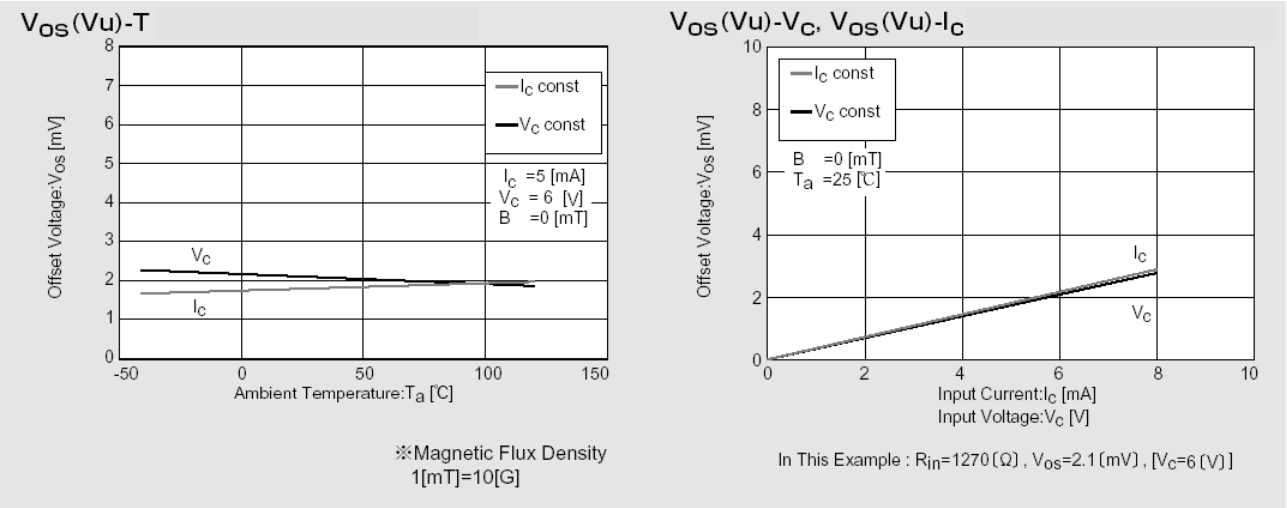

Markt Schwabener Str. 8
D-85464 Finsing
Germany

Tel.: +49 (0)8121 – 2574100
Fax: +49 (0)8121– 2574101
Email: info@cy-sensors.com
http://www.cy-sensors.com

Connection

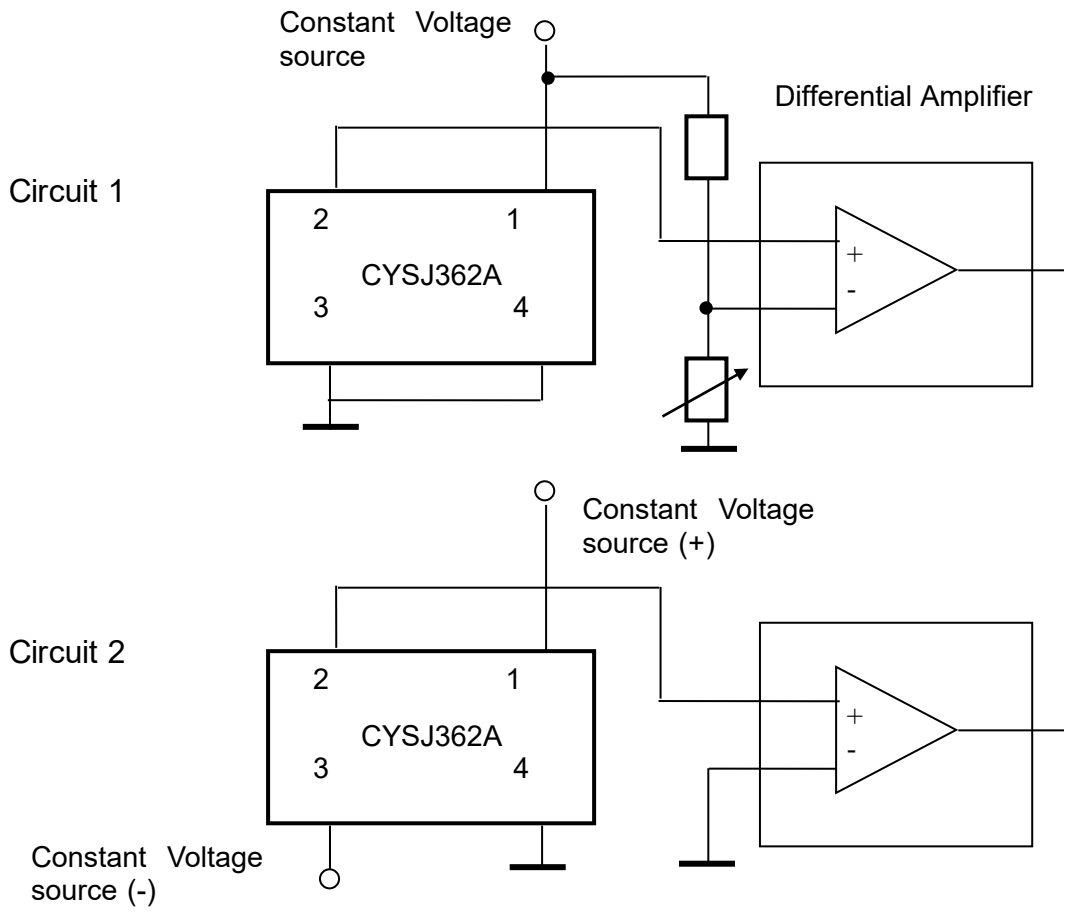

Application Notes

The Hall voltage V_H can be positive and negative. But if one connects the sensor as follows (circuit 1):

Pin 1:	positive input voltage V+, for instance +5VDC.
Pin 3:	GND
Pin 2:	OUTPUT
Pin 4:	GND

One can only measure the positive voltage at the pin 2. This means that the output voltage at zero magnetic field is not zero. This voltage is called as offset voltage. The output voltage in this case is not equal to the Hall voltage. The output voltage is equal to the sum of offset voltage and Hall voltage.

The offset voltage will be zero if you connect double power supplies V+ and V- to the sensor (circuit 2):

Pin 1:	positive input voltage V+, for instance +5VDC.
Pin 3:	negative input voltage V-, for instance -5VDC
Pin 2:	OUTPUT
Pin 4:	GND

In this case the output voltage is equal to the Hall Voltage.